BARCELONA SOFA 2 SEATER
BRS-SS-2ST

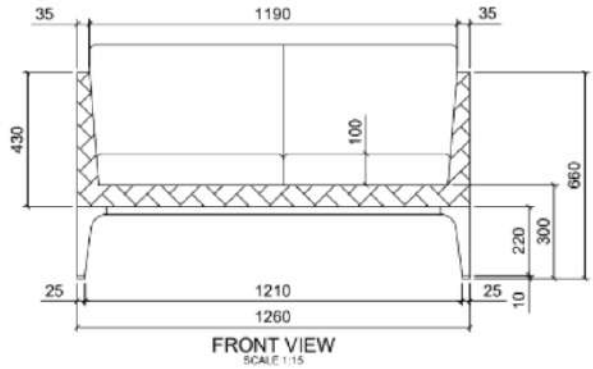

DESCRIPTION

Barcelona Sofas offer a seamless blend of contemporary and retro styles, effortlessly enhancing any space, catering to various lifestyles, and providing exceptional lounging experiences. These sofas exude a sense of luxury and sophistication, thanks to their sleek design and the use of matte aluminum material in neutral colors.

DIMENSIONS

Total Width: 126 cm
Total Depth: 72 cm
Height: 66 cm

PACKAGING

Weight : kg
Volume : 0.621157 m3
Packing : 1 / box

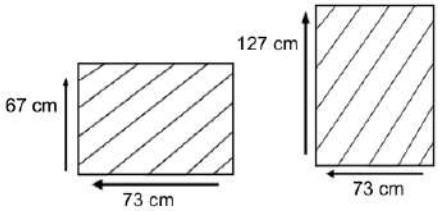

SYNTHETIC WICKER

Rehau

Cappuccino

Black

Whitewash

Honey Wicker

White

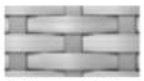
Shimmer Nickel

Java Brown

Shimmer Russet

Viro

Moccacino

Dark Brown

Java G3

CUSHION FABRICS

Sunproof

Maroon Red

044
Pacific Blue

230
Green Leaf

050
Bright Yellow

Rehau

Jockey Red

5404
Cappuccin

5476
Hearther Beige

5446
Forest Green

Turquoise

5401
Pacific Blue